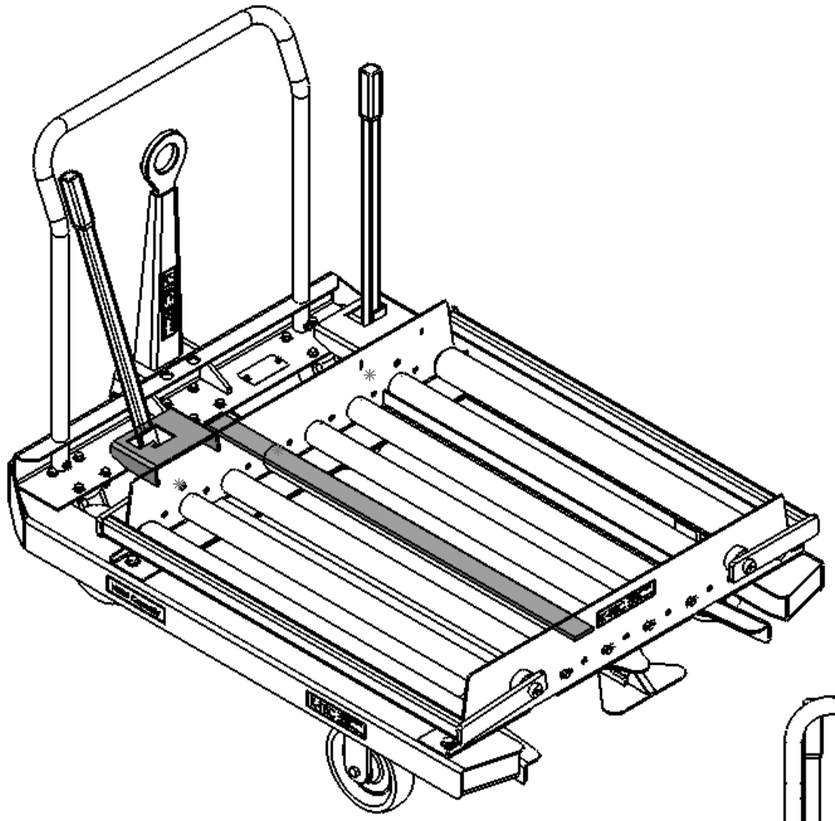

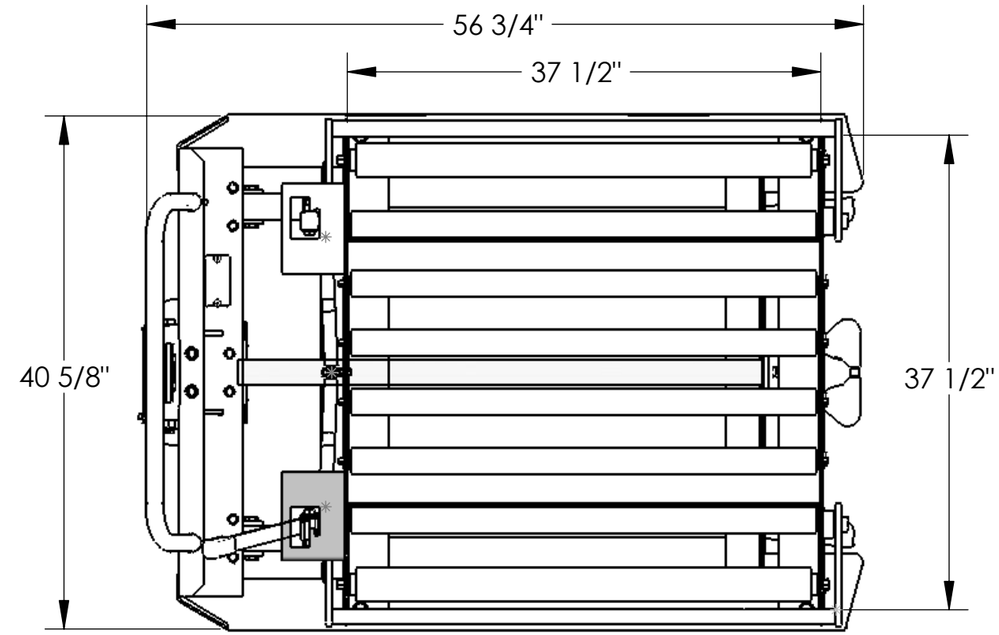

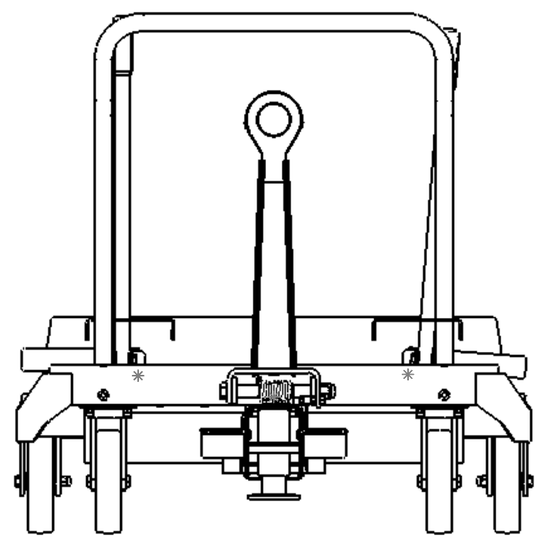

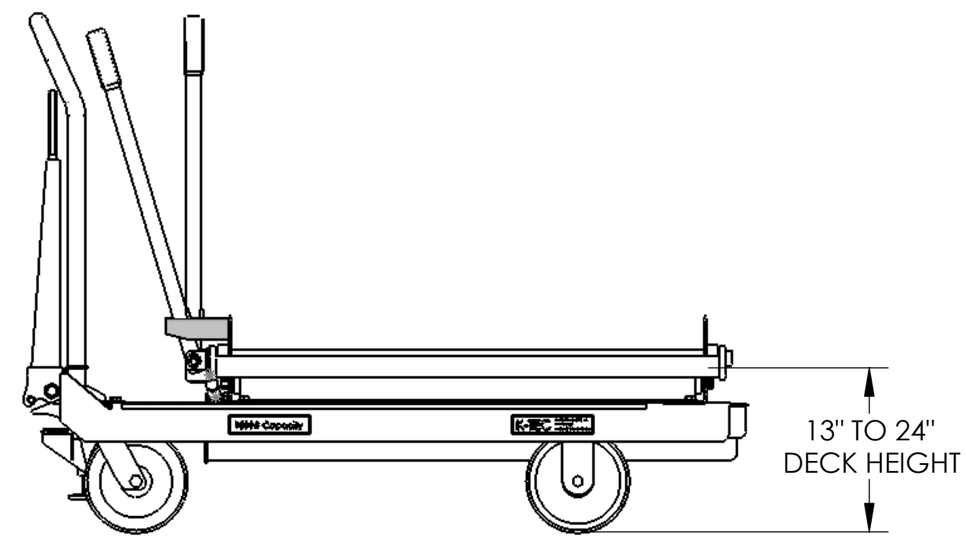

PROPRIETARY AND CONFIDENTIAL

THE INFORMATION CONTAINED IN THIS DRAWING IS THE SOLE PROPERTY OF KINETIC TECHNOLOGIES. ANY REPRODUCTION IN PART OR AS A WHOLE WITHOUT THE WRITTEN PERMISSION OF KINETIC TECHNOLOGIES IS PROHIBITED.

DATE	
PROJECT NUMBER	
QTY PER CART	
NO. OF CARTS	

UNLESS OTHERWISE SPECIFIED:

DIMENSIONS ARE IN INCHES
TOLERANCES:
FRACTIONAL ±1/16
ANGULAR: MACH ±1/2 BEND ±1
TWO PLACE DECIMAL ±.030
THREE PLACE DECIMAL ±.005

INTERPRET GEOMETRIC TOLERANCING PER:

MATERIAL
ASSEMBLY

FINISH

DO NOT SCALE DRAWING

	NAME	DATE
DRAWN	T.COLON	08/01/07
CHECKED		
ENG APPR.		
MFG APPR.		
Q.A.		

COMMENTS:

KINETIC TECHNOLOGIES

TITLE:

STANDARD ROLLER CART 39.5 X 39.5

SIZE	DWG. NO.	REV
B	6008	0

SCALE: | WEIGHT: 422.44 | SHEET 1 OF 1