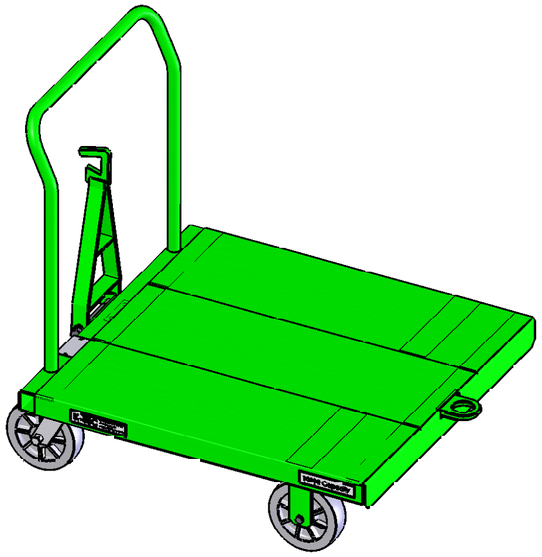

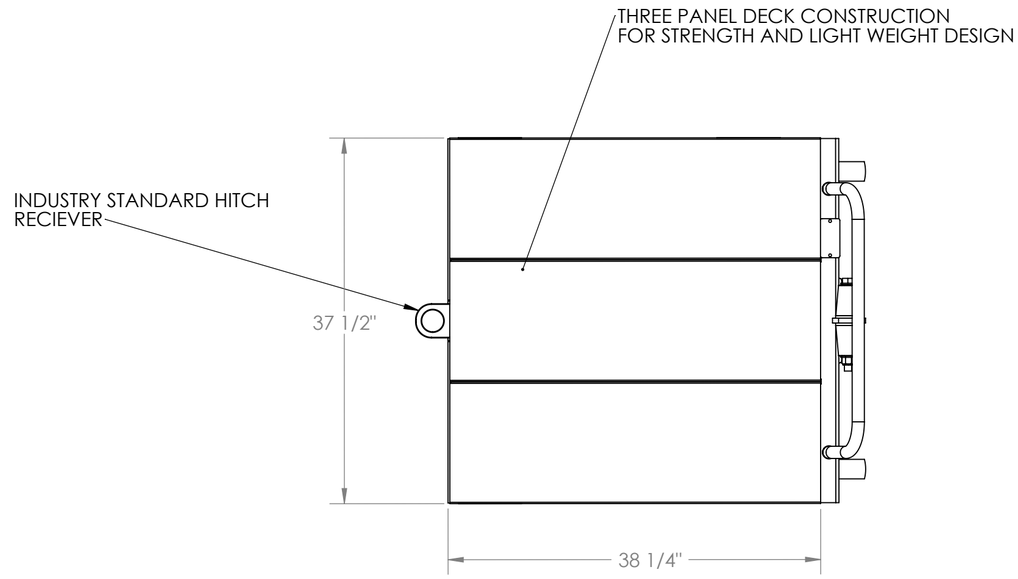

SUMMARY

- LOW PROFILE WAGON
- WEIGHT OF WAGON & HANDLE 138 LBS.
- 1000 LB CAPACITY
- (4) WHEELS
  - FRONT - 8 x 2 SOFT WHEEL / 10-1/8" SWIVEL CASTOR, STANDARD LEAD
  - REAR - 8 x 2 SOFT WHEEL / 10-1/8" RIGID RIG WELDED
- ACCOMMODATES 37 1/2" x 37-1/2" USEABLE WORK AREA
- DUNNAGE HANDLE AT TOWBAR END BOLT ON.
- INDUSTRY STYLE HITCH ASSEMBLY
- INDUSTRY STYLE TOWBAR
- 4 BEND ERGO HANDLE .
- K-TEC 8" FLOOR LOCK WITH YELLOW FOOT PAD FOR POSITIVE GRIP..
- POWDER COAT PAINT.

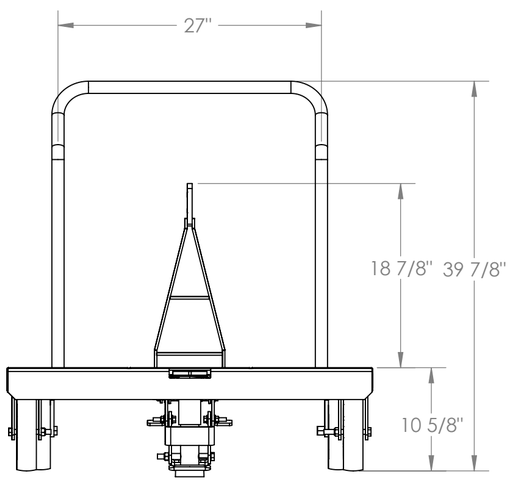

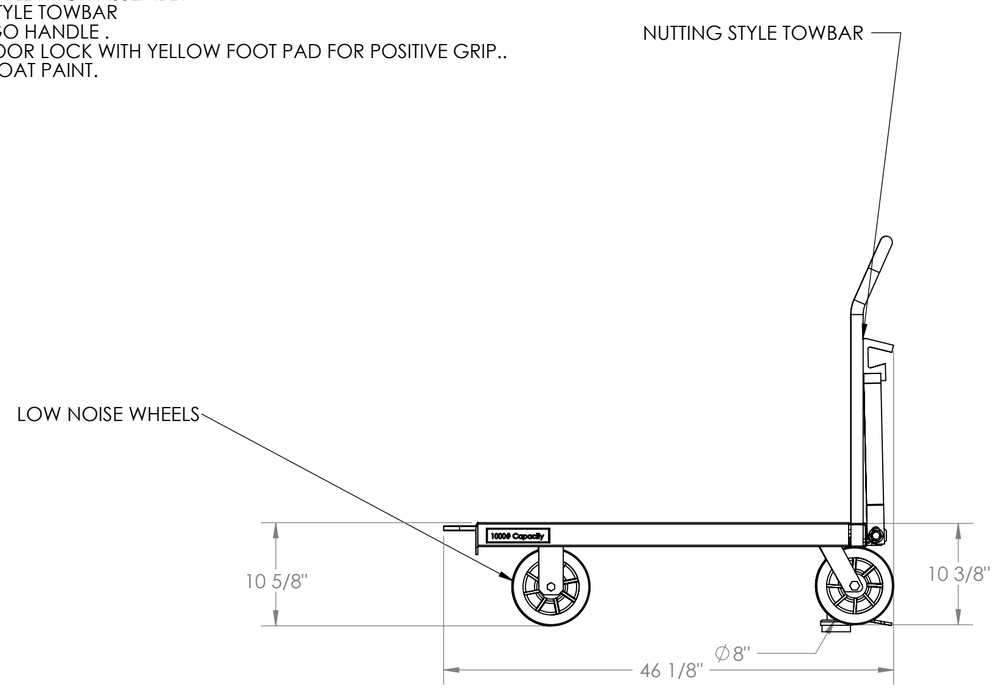

PROPRIETARY AND CONFIDENTIAL
THE INFORMATION CONTAINED IN THIS DRAWING IS THE SOLE PROPERTY OF KINETIC TECHNOLOGIES. ANY REPRODUCTION IN PART OR AS A WHOLE WITHOUT THE WRITTEN PERMISSION OF KINETIC TECHNOLOGIES IS PROHIBITED.

DATE	
PROJECT NUMBER	
QTY PER CART	
NO. OF CARTS	

UNLESS OTHERWISE SPECIFIED:
DIMENSIONS ARE IN INCHES
TOLERANCES:
FRACTIONAL ±1/32
ANGULAR: MACH ±1/2 BEND ±1
TWO PLACE DECIMAL ±.015
THREE PLACE DECIMAL ±.005
MATERIAL
SEE BOM
FINISH
AS NOTED
DO NOT SCALE DRAWING

	NAME	DATE
DRAWN	D.FABEC	12/1/06
CHECKED		
ENG APPR.		
MFG APPR.		
Q.A.		

COMMENTS:

KINETIC TECHNOLOGIES
CLEVELAND OHIO 440.943.4111

37-1/2" SQ. FLAT DECK CART

SIZE C | DWG. NO. 6025 USER | REV 0

SHIPPING WEIGHT: 136.37LBS. | SHEET 1 OF 1