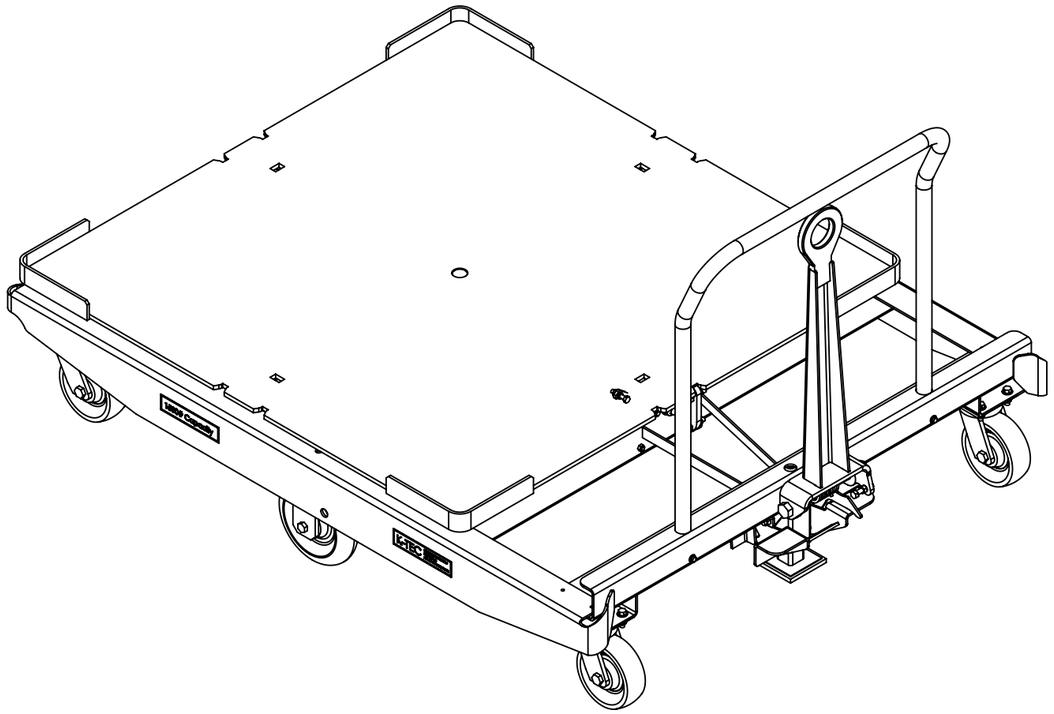

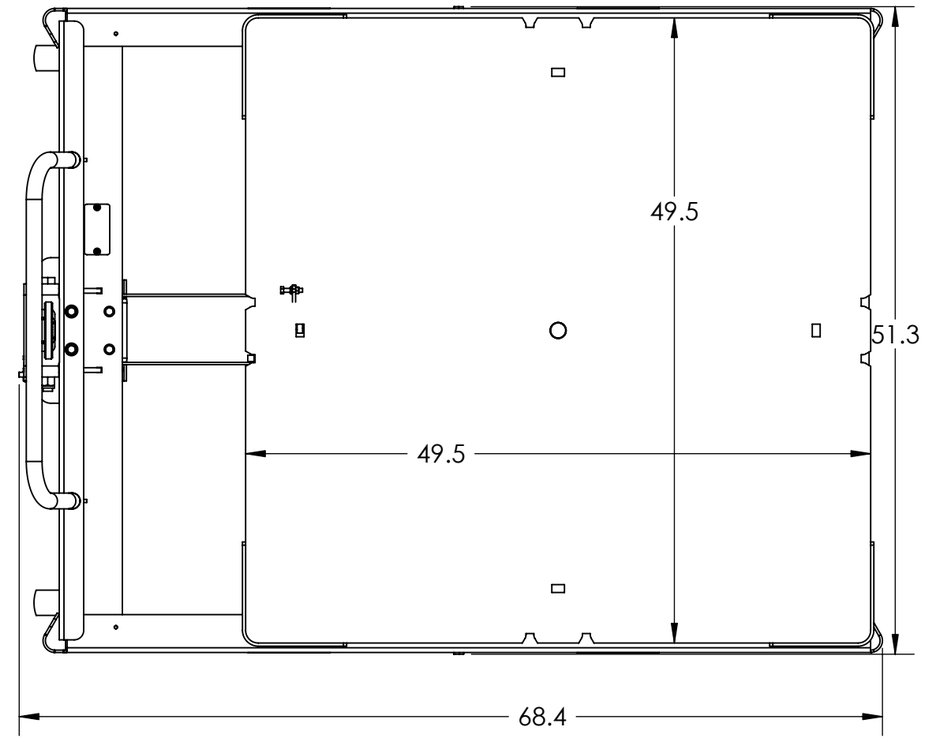

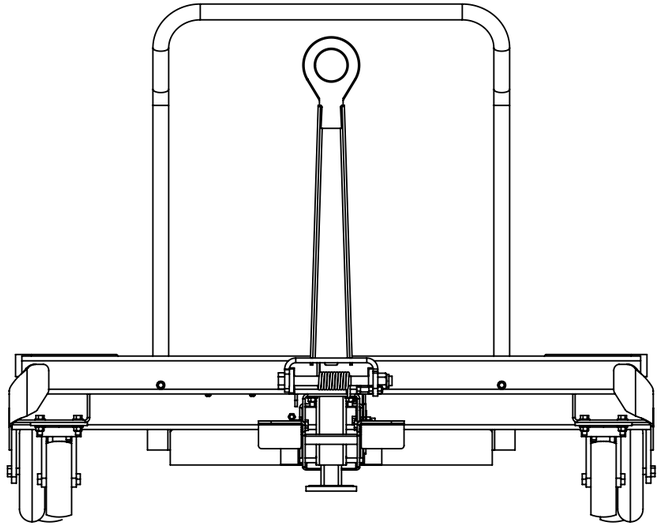

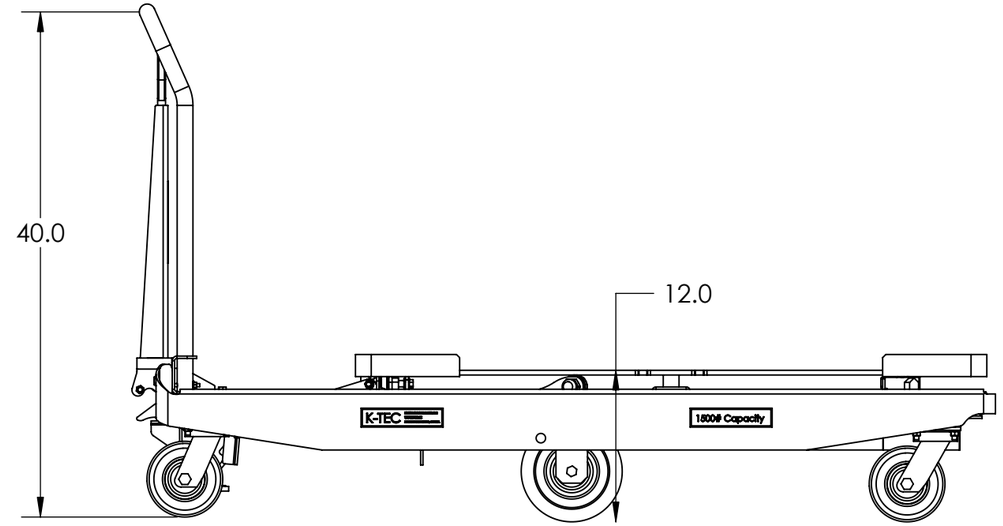

PROPRIETARY AND CONFIDENTIAL
THE INFORMATION CONTAINED IN THIS DRAWING IS THE SOLE PROPERTY OF KINETIC TECHNOLOGIES. ANY REPRODUCTION IN PART OR AS A WHOLE WITHOUT THE WRITTEN PERMISSION OF KINETIC TECHNOLOGIES IS PROHIBITED.

DATE	
PROJECT NUMBER	
QTY PER CART	
NO. OF CARTS	

UNLESS OTHERWISE SPECIFIED:

DIMENSIONS ARE IN INCHES
TOLERANCES:
FRACTIONAL ±1/32
ANGULAR: MACH ±1/2 BEND±1
TWO PLACE DECIMAL ±.015
THREE PLACE DECIMAL ±.005

MATERIAL

FINISH

DO NOT SCALE DRAWING

	NAME	DATE
DRAWN	M BAILOR	12/6/06
CHECKED		
ENG APPR.		
MFG APPR.		
Q.A.		

COMMENTS:

KINETIC TECHNOLOGIES
CLEVELAND OHIO 440.943.4111

49.5 x 49.5 ROTATE TOP CART

SIZE	DWG. NO.	REV
B	6007 USER	0

WEIGHT: 554LBS.

SHEET 1 OF 2

LIFT TABLE GUIDES LOCATION

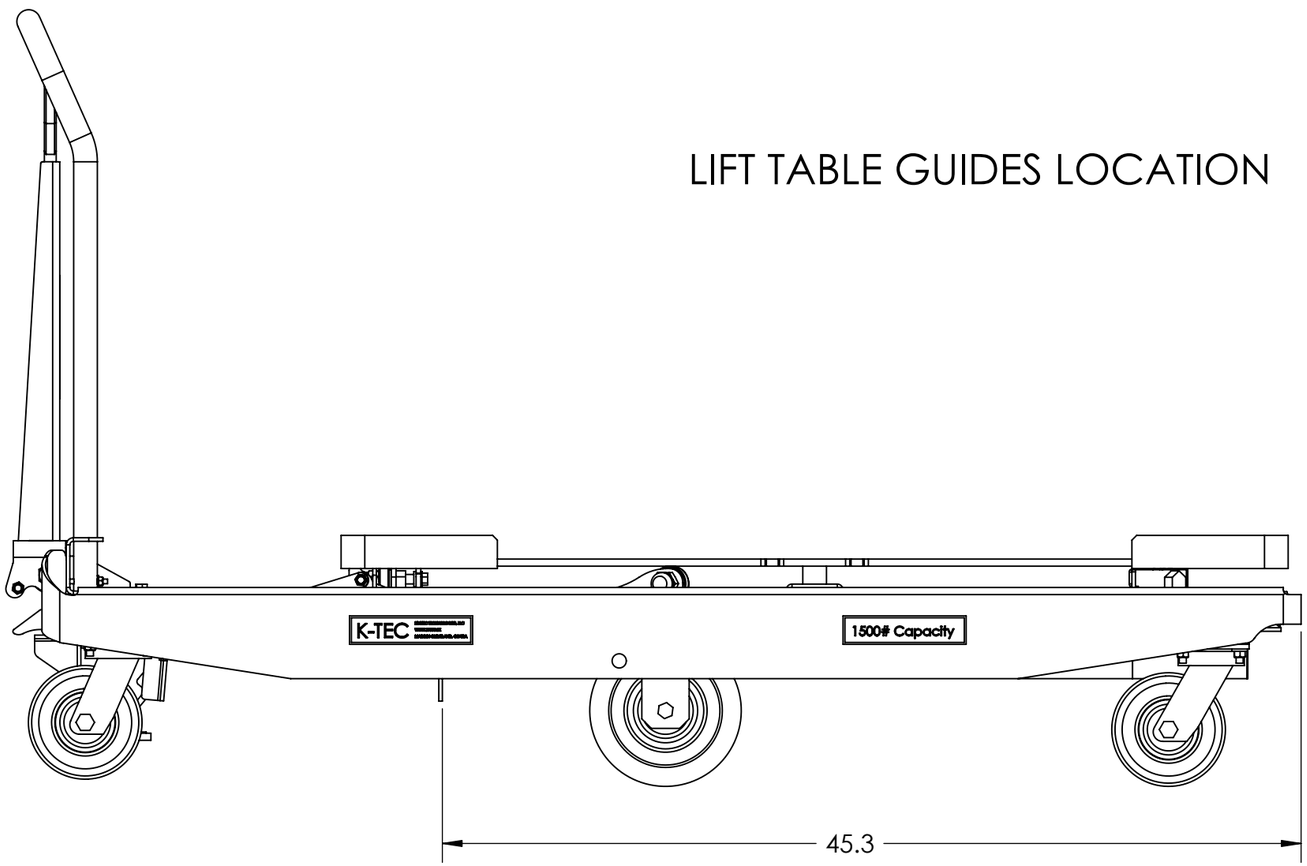

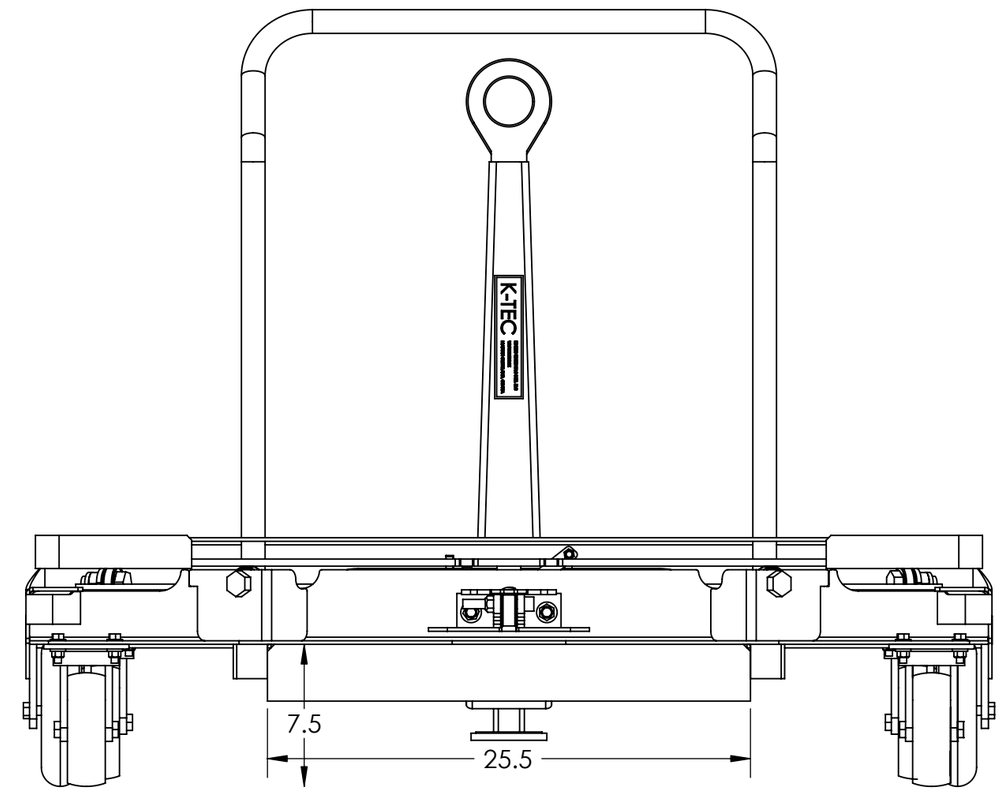

PROPRIETARY AND CONFIDENTIAL
THE INFORMATION CONTAINED IN THIS DRAWING IS THE SOLE PROPERTY OF KINETIC TECHNOLOGIES. ANY REPRODUCTION IN PART OR AS A WHOLE WITHOUT THE WRITTEN PERMISSION OF KINETIC TECHNOLOGIES IS PROHIBITED.

DATE	
PROJECT NUMBER	
QTY PER CART	
NO. OF CARTS	

UNLESS OTHERWISE SPECIFIED:

DIMENSIONS ARE IN INCHES
TOLERANCES:
FRACTIONAL ±1/32
ANGULAR: MACH ±1/2 BEND±1
TWO PLACE DECIMAL ±.015
THREE PLACE DECIMAL ±.005

MATERIAL

FINISH

DO NOT SCALE DRAWING

	NAME	DATE
DRAWN	M BAILOR	12/6/06
CHECKED		
ENG APPR.		
MFG APPR.		
Q.A.		

COMMENTS:

KINETIC TECHNOLOGIES
CLEVELAND OHIO 440.943.4111

49.5 x 49.5 ROTATE TOP CART

SIZE B | DWG. NO. 6007 USER | REV 0

WEIGHT: 554LBS. | SHEET 2 OF 2